Fermilab

LAB 3 CRYOGENIC SYSTEM
4 CASSETTE VLPC TEST CRYOSTAT
I/O & CONTROLS

ENGINEERING NOTE
3823.113-EN-481

Dan Markley
Fermi Accelerator Lab
January 12,1998

Table of Contents

I. Introduction
II. Equipment Layout and Cable Routing
  A. LAB3 equipment location
  B. LAB3 Controls Cable Interconnection Block Diagram
III. I/O Base Layout and I/O Map
  A. I/O Base #0
  B. I/O Base #1
  C. Cable and Device Assignments
    1. Cable Set #1
    2. Cable Set #2
    3. Cable Set #3
    4. Cable Set #4
    5. Cable Set #5
    6. Cable Set #6
  D. Lab 3 I/O Map and Assignments
IV. Instrumentation
  A. Platinum RTD
  B. Carbon Glass RTD
  C. Cernox RTD
  D. Pressure Transmitter
  E. Control Valve
V. Control logic
  A. Wiggins Limit Switches
    1. HIHI Limit (open)
    2. HI Limit (open)
    3. LO Limit (open)
    4. LOLO Limit (open)
  B. Wiggins Vent Valve (EV-41-H)
    1. EV-41-H Venting (OFF)
    2. EV-41-H Flowing to Wiggins (ON)
  C. Corblin High pressure Compressor
    1. Compressor Running
    2. Compressor Loaded
VI. Instrumentation Power

VII. I Introduction

Dzero is using LAB3 as a test facility for the VCLPC (Visible Light Photon Counter) Cassettes and Cryostats. This installation will use liquid Helium from a vendor provided Dewar trailer for the cryostat refrigeration. The gas Helium will then be recovered and pumped into high pressure trailers and be sent back to the vender. Most of this system was installed at LAB6 and was operated in 1995 and 1996.

The previous control system was a hardwired type system with 2 MOORE 352 controllers performing loop controls with some limited logic control. The installation at LAB3 will replace this control system with a commercial Programmable Logic Controller, a TI545. The TI545 will allow centralized loop and logic control. The VLPC cassette temperature monitoring and control will also be performed by this PLC. The entire LAB3 system will be on the sitewide FIX32 operator interface.

This note describes the specifications and configuration of the physical Input/Output devices and instrumentation of the LAB3 Control System.

Lab3 also has an oven used to bake Carbon fiber cylinders. The TI545 will monitor these temperatures using 'T' Thermocouples installed in a remote base.

Reference Drawing: 3823.113-ME-358380 LABS VLPC CRYOSTAT TEST STAND PROCESS FLOW DIAGRAM

II. Equipment Layout and Cable Routing

A. LAB3 equipment location

Top View of Lab 3 Cryogenic Equipment

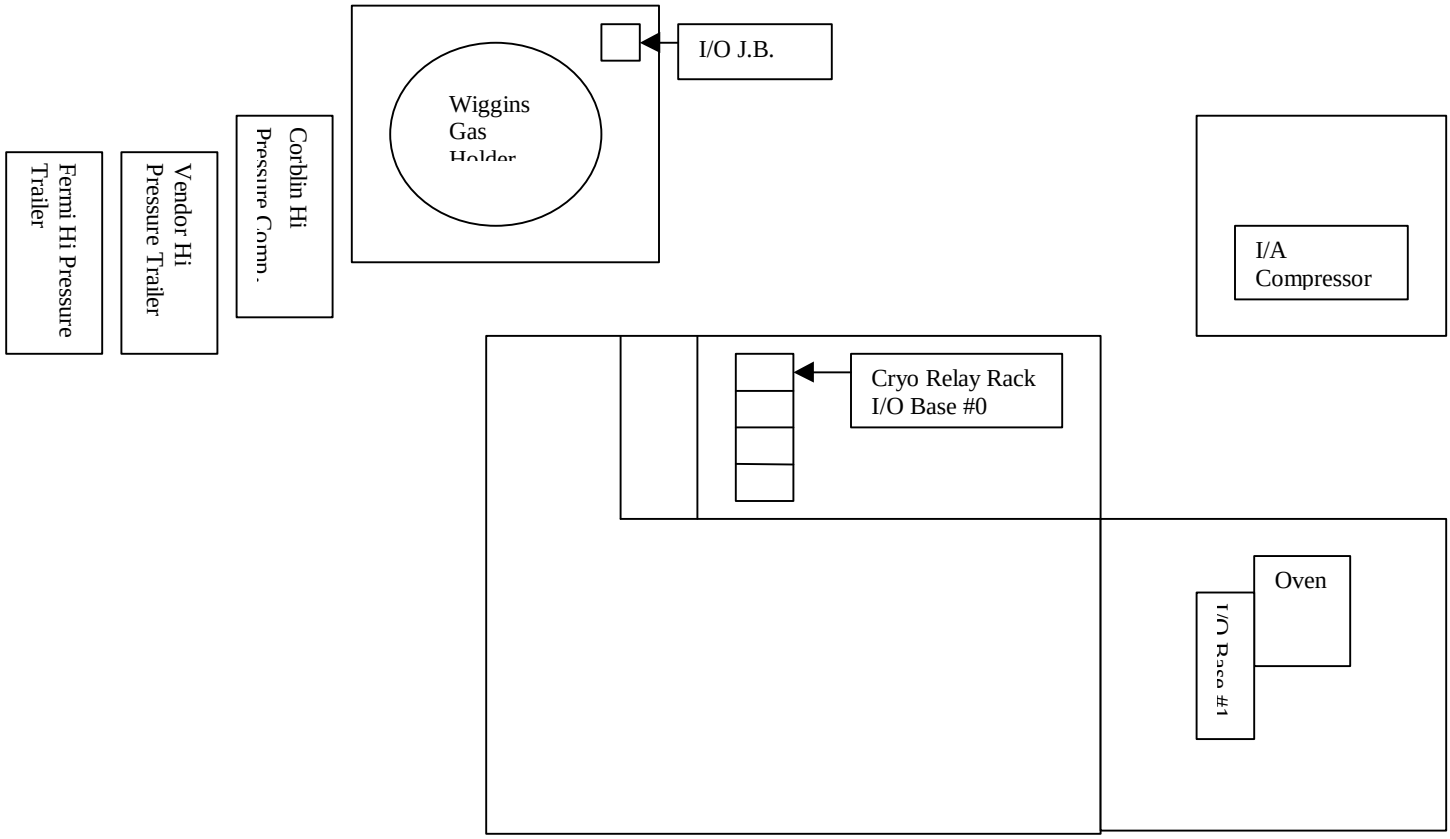

A. LAB3 Controls Cable Interconnection Block Diagram

Lab 3 Cryogenic Controls Interconection and Cabling Block Diagram

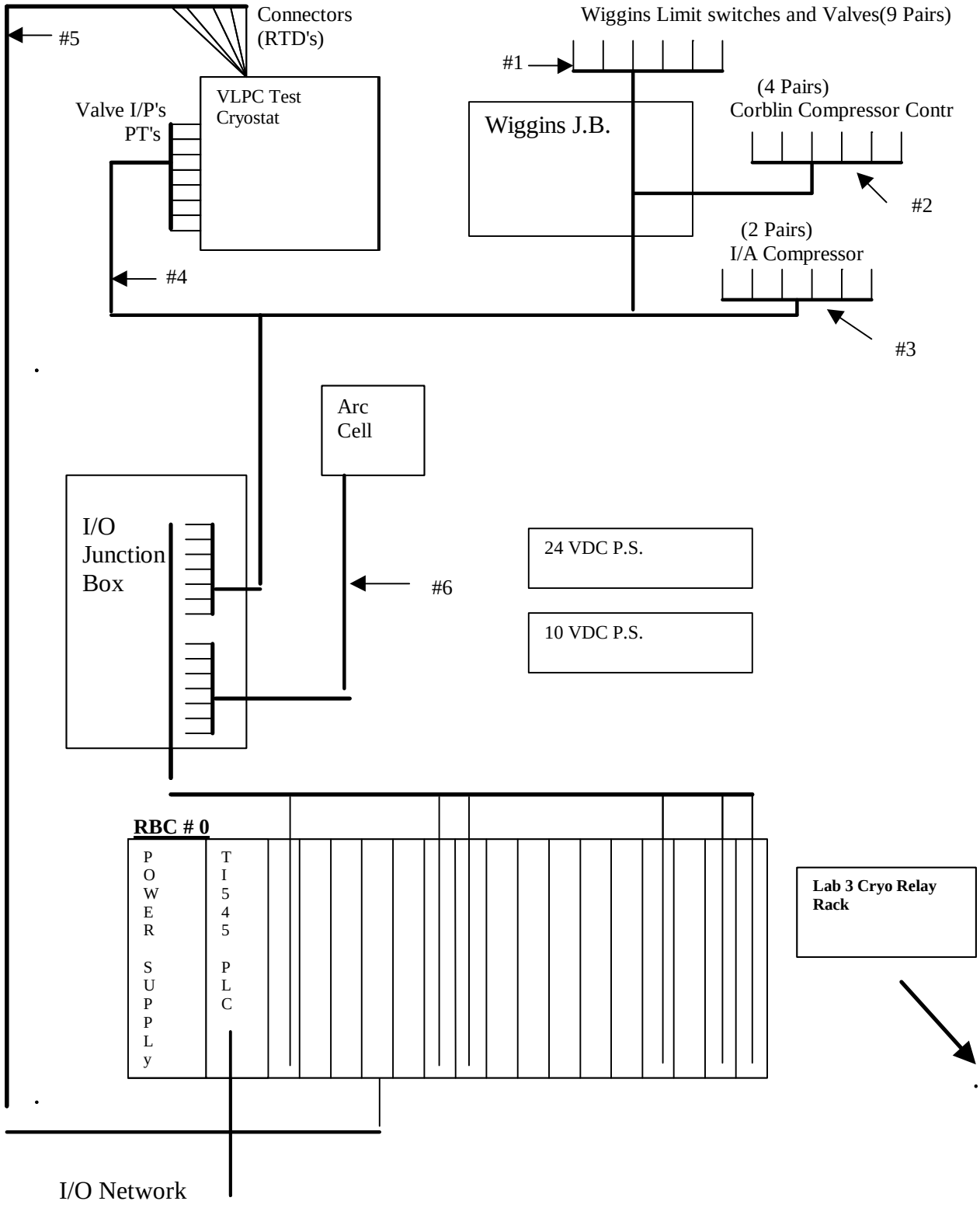

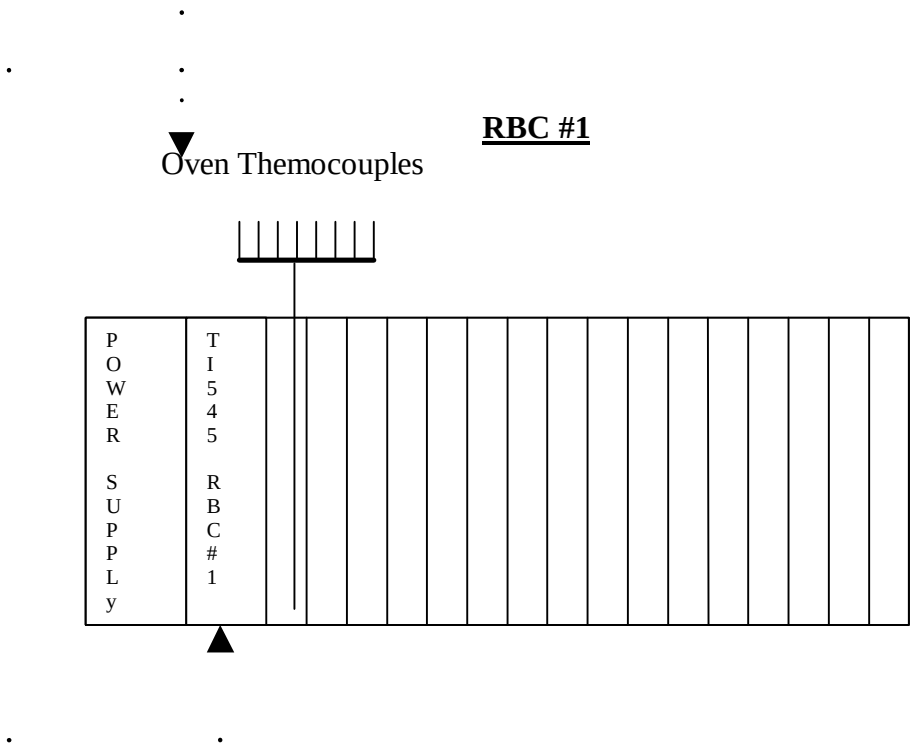

III I/O Base Layout and I/O Map

A. I/O Base #0

Slot 1-Siemens 8 Channel Analog Input Module. 505-6108A
Slot 4-CTI 16 Channel RTD Module. 2557 SPQ334
Slot 6-Siemens 8 Channel Analog Output Module. 505-6208A
Slot 7-Siemens 8 Channel Analog Output Module. 505-6208A
Slot 10-CTI Ethernet Module. Mod# 2552
Slot 13-Siemens 16 Channel DC Input Module. 505-4316A
Slot 15-1/2 Siemens 16 Channel DC Output Module. 505-4716
Slot 16-1/2 Siemens 16 Channel DC Output Module. 505-4716

B. I/O Base #1

Slot 1-Siemens 8 Ch Thermocouple Input. 505-7028

C. Cable and Device Assignments

Cable Set #1	Device	Cable Type
	Wiggins HiHi Limit Switch	Plenum Pair
	Wiggins Hi Limit Switch	Plenum Pair
	Wiggins Lo Limit Switch	Plenum Pair
	Wiggins LoLO Limit Switch	Plenum Pair
	Wiggins EV41H	Plenum Pair
	Wiggins EV41H Closed Switch	Plenum Pair
	Wiggins EV41H Open Switch	Plenum Pair
	Wiggins PS44H	Plenum Pair
	Wiggins PT-48-H	Plenum Pair

Cable Set #2	Device	Cable Type
	Corblin	
	A--Transmitter +	MultiConductor
	B--Transmitter -	MultiConductor
	C--Comp Motor Stat Relay	MultiConductor
	D--Comp Motor Stat Realy Com	MultiConductor
	E--Comp Run Command +24 VDC	MultiConductor
	F--Comp Run Command Common	MultiConductor
	G--Comp Load Command +24 VDC	MultiConductor
	H--Comp Load Command Common	MultiConductor

Cable Set #3	Device	Cable Type
	I/A Comp Motor Stat	Plenum Pair
	I/A Air Pressure Transmitter	Plenum Pair

Cable Set #4	Device	Cable Type
	FCV-308H	Plenum Pair
	FCV-312H	Plenum Pair
	PV7H	Plenum Pair
	PT71H	Plenum Pair
	PT27H	Plenum Pair
	TE304H	Plenum 2 Pair
	TE308H	Plenum 2 Pair
	TE310H	Plenum 2 Pair
	TE29	Plenum 2 Pair

Cable Set #5 Device Cable Type

This set of instruments contains Cernox temperature sensors and Carbon resistors for chip heaters. These instruments and their curve fits will be handled independently of this engineering note as they could be highly dynamic. These devices should be tracked using the local system binders.

Cable Set #6	Device	Cable Type

Back of Arc cell has an 8 Pin Burndy Bulkhead Connector.

Pin A	+V signal	0-5Vdc = 0-50PPM	Plenum Pair
Pin B	-V signal		

D. Lab 3 I/O Map and Assignments

Ch	Bs	SL/PT	Type	Address	Device Tag	Description	Sex	Range
1	0	01/01	Analog	WX0001	PT619(PT71H)	Pressure Transmitter for Helium	4-20mA	0-25 psig
1	0	01/02	Analog	WX0002	PT-27-H	LHe Supply Pressure	4-20mA	0-9.0 PSI
1	0	01/03	Analog	WX0003	PT-48-H	Suction Pressure	4-20mA	0-2.0 PSI
1	0	01/04	Analog	WX0004	PT-80-H	Hi Pressure to Airco Tube	4-20mA	0-3000psig
1	0	01/05	Analog	WX0005	ARC_CELL	ARC_CELL	0-10VDC	0-100PPM
1	0	01/06	Analog	WX0006		Instrument Air Pressure	4-20mA	0-250 psig
1	0	01/07	Analog	WX0007				
1	0	01/08	Analog	WX0008				
1	0	04/01	RTD In	WX0025	TE200	Temp. element on Cassette 1		
1	0	04/02	RTD In	WX0026	TE202	Temp. element on Cassette 2		
1	0	04/03	RTD In	WX0027	TE204	Temp. element on Cassette 3		
1	0	04/04	RTD In	WX0028	TE206	Temp. element on Cassette 4		
1	0	04/05	RTD In	WX0029	TE304	Temp. element on liquid helium		
1	0	04/06	RTD In	WX0030	TE306	Temp. element on LHe cold		
1	0	04/07	RTD In	WX0031	TE310	Temp. element on GHe		
1	0	04/08	RTD In	WX0032	K2	VLPC Chip Temp		
1	0	04/09	RTD in	WX0033	L6	VLPC Chip Temp		
1	0	04/10	RTD in	WX0034	M2	VLPC Chip Temp		
1	0	04/11	RTD in	WX0035	L2	VLPC Chip Temp		
1	0	04/12	RTD in	WX0036	M8	VLPC Chip Temp		
1	0	04/13	RTD in	WX0037	M4	VLPC Chip Temp		
1	0	04/14	RTD in	WX0038	M6	VLPC Chip Temp		
1	0	04/15	RTD in	WX0039	L4	VLPC Chip Temp		
1	0	04/16	RTD in	WX0040	**TE-29-H**	Plat RTD-HX 1 Inlet		
1	0	06/01	Analog	WY0049	HTR200-1	#1 & #2 heater elements on	0-20mA	0-100%
1	0	06/02	Analog	WY0050	HTR202-3	#1 & #2 heater elements on	0-20mA	0-100%
1	0	06/03	Analog	WY0051	HTR204-5	#1 & #2 heater elements on	0-20mA	0-100%
1	0	06/04	Analog	WY0052	HTR206-7	#1 & #2 heater elements on	0-20mA	0-100%
1	0	06/05	Analog	WY0053	FCV308-HE	Flow control valve for cold block	4-20mA	0-100%
1	0	06/06	Analog	WY0054	FCV312-HE	Flow control valve for GHe	4-20mA	0-100%
1	0	06/07	Analog	WY0055				
1	0	06/08	Analog	WY0056				
1	0	07/01	Analog	WY0057	**PV-7-H**	VLPC Cass Upper Intcpt Flow	4-20mA	0-100%
1	0	07/02	Analog	WY0058				
1	0	07/03	Analog	WY0059				
1	0	07/04	Analog	WY0060				
1	0	07/05	Analog	WY0061				
1	0	07/06	Analog	WY0062				
1	0	07/07	Analog	WY0063				
1	0	07/08	Analog	WY0064				
1	0	13/01	DI	X0169	Comp-INTLK	"LAB3" Corblin Interlocked	Relay	
1	0	13/02	DI	X0170	Comp-Stat	"LAB3" Corblin Running Status	Relay	
1	0	13/03	DI	X0171	EV-41-H-CL	"LAB3" EV-41 Closed Status	Close on Close	
1	0	13/04	DI	X0172	EV-41-H-OP	"LAB3" EV-41 Open Status	Close on Open	
1	0	13/05	DI	X0173	K2-Comp	"LAB3" K2 Corblin Control	Relay	

Ch	Bs	SL/PT	Type	Address	Device Tag	Description	Sex	Range
1	0	13/06	DI	X0174	WIG-HH	"LAB3"Wiggins HIHI Limit	Open on Trip	
1	0	13/07	DI	X0175	WIG-HI	"LAB3"Wiggins HI Limit Switch	Open on Trip	
1	0	13/08	DI	X0176	WIG-LL	"LAB3"Wiggins LOLO Limit	Open on Trip	
1	0	13/09	DI	X0177	WIG-LO	"LAB3"Wiggins LO Limit Switch	Open on Trip	
1	0	13/10	DI	X0178	I/A Comp	"LAB3" I/A Compressor Status	Open on OFF	
1	0	13/11	DI	X0179	Corb-Stat	"LAB3" Corblin Motor Status		
1	0	13/12	DI	X0180	PS-44-H	"LAB3"Wiggins pressure switch	Open on Trip	
1	0	13/13	DI	X0181		"LAB3"		
1	0	13/14	DI	X0182		"LAB3"		
1	0	13/15	DI	X0183		"LAB3"		
1	0	13/16	DI	X0184		"LAB3"		
1	0	15/01	DO	Y0201	EV-41-H	"LAB3"Helium to Wiggins/vent	On = wiggins	
1	0	15/02	DO	Y0202	Corb-Run	"LAB3"Corblin run Command		
1	0	15/03	DO	Y0203	Corb-Load	"LAB3"Corblin Load Command		
1	0	15/04	DO	Y0204		"LAB3"		
1	0	15/05	DO	Y0205		"LAB3"		
1	0	15/06	DO	Y0206		"LAB3"		
1	0	15/07	DO	Y0207		"LAB3"		
1	0	15/08	DO	Y0208		"LAB3"		
1	0	15/09	DO	Y0209		"LAB3"		
1	0	15/10	DO	Y2010		"LAB3"		
1	0	15/11	DO	Y2011		"LAB3"		
1	0	15/12	DO	Y2012		"LAB3"		
1	0	15/13	DO	Y2013		"LAB3"		
1	0	15/14	DO	Y2014		"LAB3"		
1	0	15/15	DO	Y2015		"LAB3"		
1	0	15/16	DO	Y2016		"LAB3"		
1	1	01/01	TC Input	WX0321		"LAB3"		
1	1	01/02	TC Input	WX0322		"LAB3"		
1	1	01/03	TC Input	WX0323		"LAB3"		
1	1	01/04	TC Input	WX0324		"LAB3"		
1	1	01/05	TC Input	WX0325		"LAB3"		
1	1	01/06	TC Input	WX0326		"LAB3"		
1	1	01/07	TC Input	WX0327		"LAB3"		
1	1	01/08	TC Input	WX0328		"LAB3"		

V. Instrumentation

The PLC communicates to the real world through it's input and output channels. Lab 3 PLC inputs are pressure transmitters, voltage signals, and temperature RTD's. Lab 3 PLC outputs are valves and voltage signals.

Temperature is measured by three types of sensors throughout the Cryostat. The three sensors are platinum RTD’s, Carbon Glass RTD’s, and Cernox RTD’s. Each RTD’s resistance is measured by the control system I/O base. The control system then curve fits the resistance into temperature using the following curve fit equations. All RTD’s are four wire devices.

A. Platinum RTD

Platinum RTD’s are useful between room temp to 70 degrees kelvin. They are typically used on nitrogen shield related devices and cryogenic transitions to room temperature, such as vent piping.

PLATINUM RESISTOR

Temp.(Celsius)	Temp.[K]	Resist.[ohms]	Temp.(Celsius)	Temp.[K]	Resist.[ohms]
-200	73	18.49	-40	233	84.27
-190	83	22.80	-30	243	88.22
-180	93	27.08	-20	253	92.16
-170	103	31.32	-10	263	96.09
-160	113	35.53	0	273	100.00
-150	123	39.71	10	283	103.90
-140	133	43.87	20	293	107.79
-130	143	48.00	30	303	111.67
-120	153	52.11	40	313	115.54
-110	163	56.19	50	323	119.40
-100	173	60.25	60	333	123.24
-90	183	64.30	70	343	127.07
-80	193	68.33	80	353	130.89
-70	203	72.33	90	363	134.70
-60	213	76.33	100	373	138.50
-50	223	80.31			

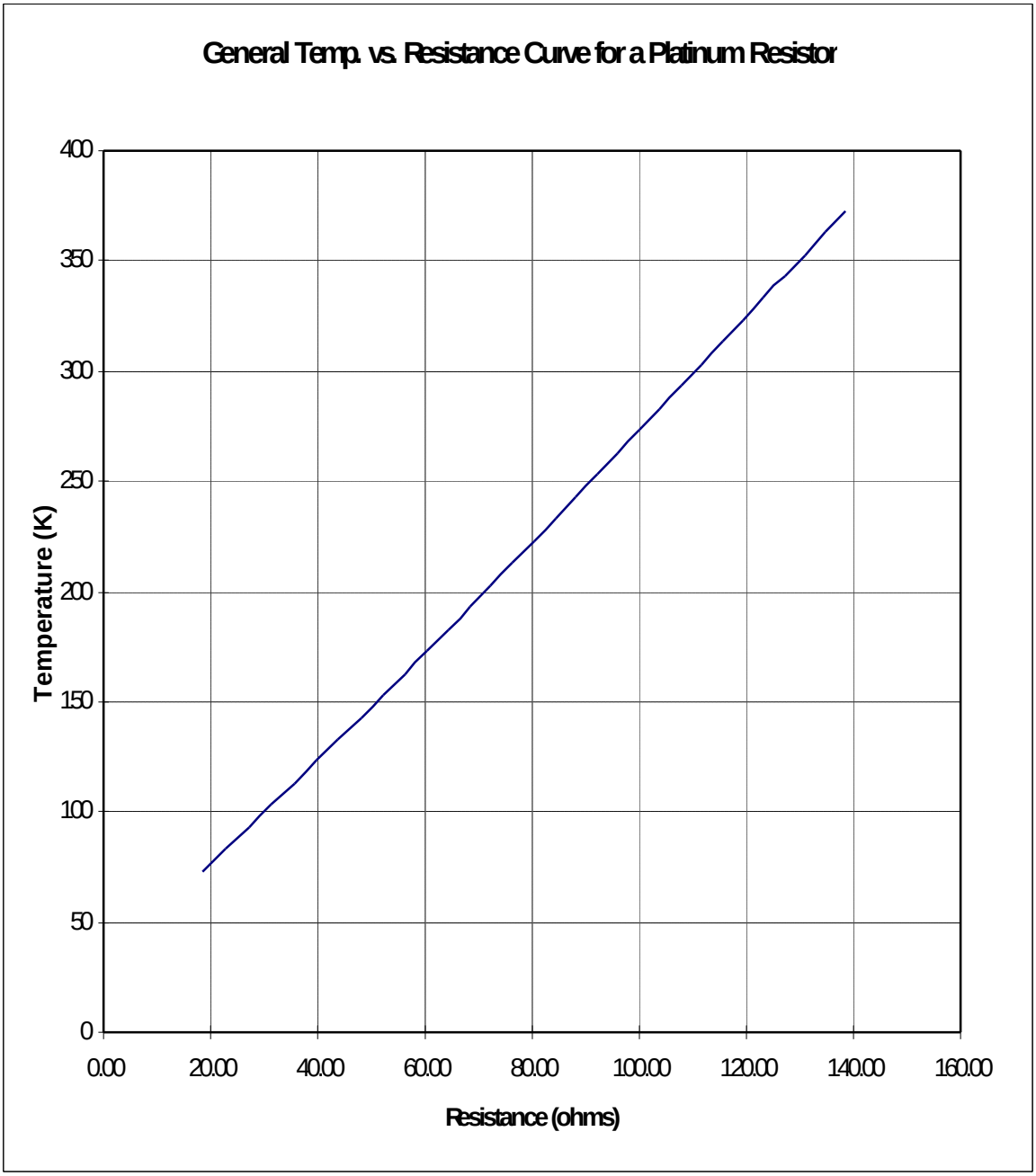
General Temp. vs. Resistance Curve for a Platinum Resistor
Temperature (K)
400
350
300
250
200
150
100
50
0
0.00
20.00
40.00
60.00
80.00
100.00
120.00
140.00
160.00
Resistance (ohms)

B. Carbon Glass RTD

The Carbon Glass RTD's have a useful temperature range of between 1 and 50 Degrees Kelvin. They are particularly sensitive below 10 degrees Kelvin. Special Control Technology Inc. PLC modules were ordered to measure these sensors. The modules have a stimulation current of 10 microAmps, and can read a resistance range of 0 to 1060 ohms.

These RTD's are individually curve fit to match their resistance with the temperature. The following plots and curve fit equations are for a carbon glass RTD with the serial #C16795.

TR3301 C16795

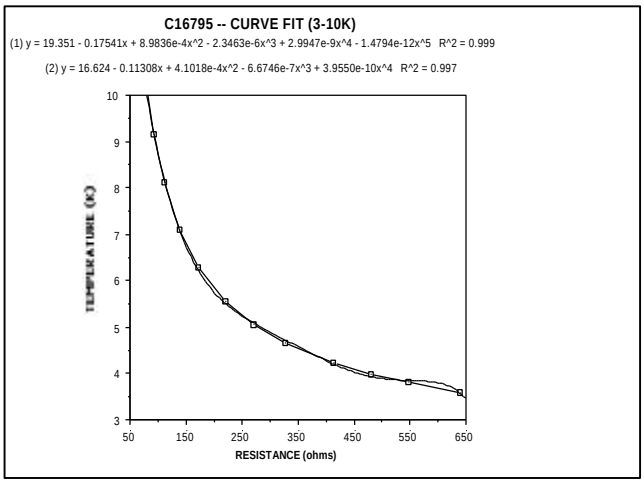

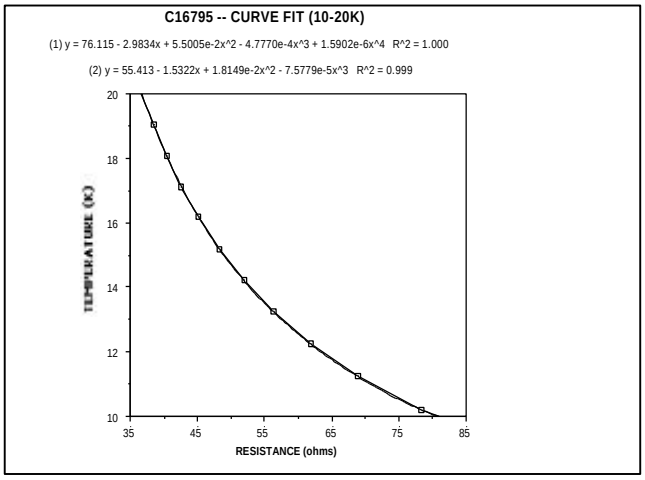

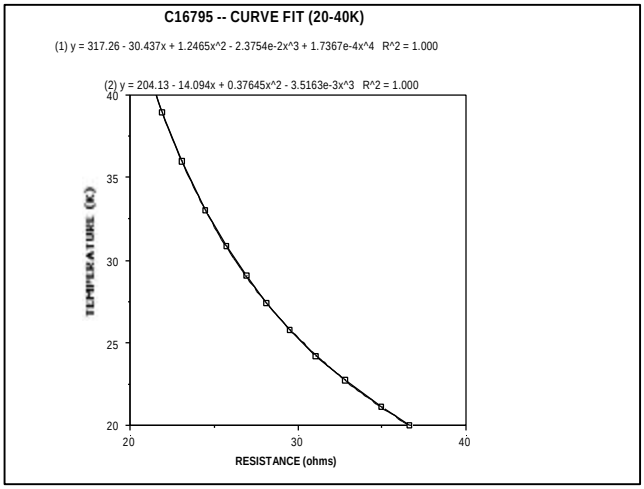

C. Cernox RTD

The Cernox RTD’s have a useful temperature range of between 1 and 50 Degree Kelvin. They’re sensitivity is more linear than Carbon Glass RTD’s. This type of sensitivity is used in places where the normal operating temperature may be between 6 and 20 degrees Kelvin. Special Control Technology Inc. PLC modules were ordered to measure these sensors. The modules have a stimulation current of 10 microAmps, and can read a resistance range of 0 to 1060 ohms.

These RTD’s are individually curve fit to match their resistance with the temperature. The following plots and curve fit equations are for a carbon glass RTD with the serial #X30594.

X30594

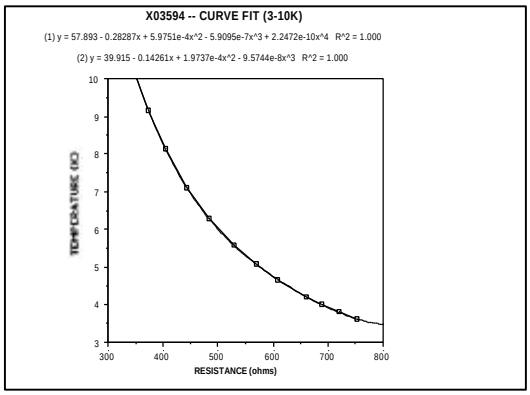

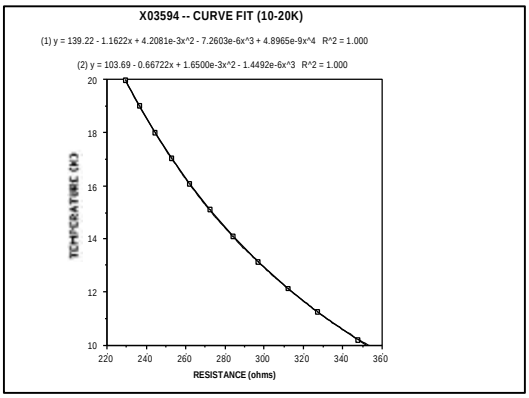

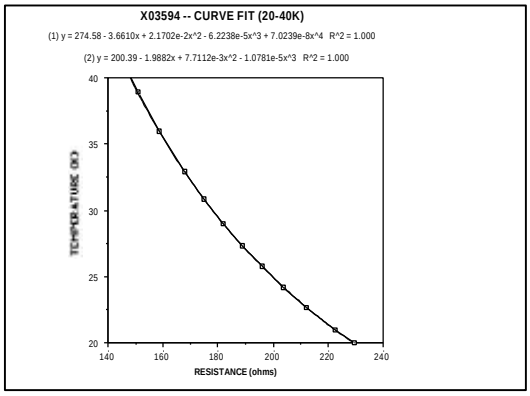

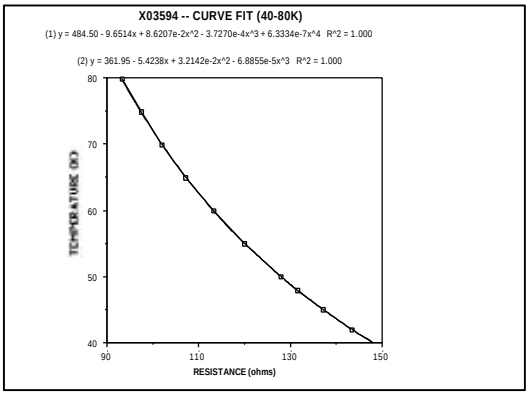

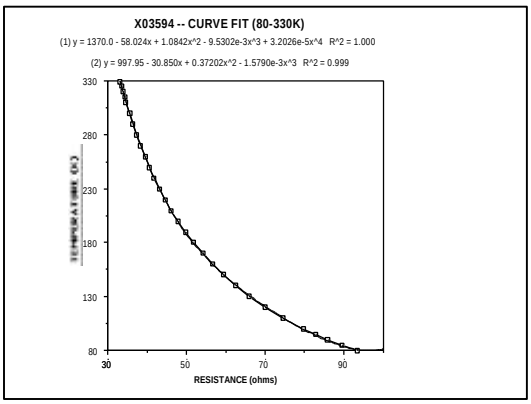

D. Pressure Transmitter

The VLPC Test System’s Pressure transmitters are a mixture of manufacturers models and types(see I/O map for details). They all have 4-20mA outputs, which require 24 VDC applied to the + Terminal. The - terminal is connected to the proper analog input of the PLC base #0. Refer to the I/O map for the transmitter to I/O assignments.

E. Control Valve

The control valves for the VLPC test system are all pneumatically driven and positioned by a Badger 1/2", type 766 air to open Actuator. This actuator has the positioner built into it, and requires a 3-15 psi air signal for to set its current position. Each actuator has a Fairchild model #T600 I/P connected to it's air signal input port. The Fairchild I/P converts a 4-20 mA signal from the PLC I/O base into a 3-15 PSI air signal.

Each I/P has an analog output I/O assignment in the PLC I/O map for base #0. The assigned output should be tied to the red wire on the I/P. The black wire on each I/P should be tied to common. Refer to the I/O map for the I/P to I/O assignments.

V. Control logic

The TI545 PLC installed at Lab 3 will be programmed to control the following I/O with the listed logic. This logic was done at the previous Lab 6 installation with discrete relays and the Moore 352 controllers.

A. Wiggins Limit Switches
1. HIHI Limit (open)
EV-41-H in Vent Mode and Alarm
2. HI Limit (open)
Corblin On and Loaded
3. LO Limit (open)
Corblin UnLoaded
4. LOLO Limit (open)
Corblin Off and Alarm

B. Wiggins Vent Valve (EV-41-H)
1. EV-41-H Venting (OFF)
a. Wiggins HIHI limit Switch Open
or
b. PS-44-H Open
2. EV-41-H Flowing to Wiggins (ON)
a. Wiggins HIHI limit Switch Closed
and
c. PS-44-H Closed

C. Corblin High pressure Compressor
3. Compressor Running
a. Operator Command
and
b. Not LOLO Limit
4. Compressor Loaded
a. Operator Command
and
b. Corblin Motor Status On

and
c. Hi Limit

VI. Instrumentation Power

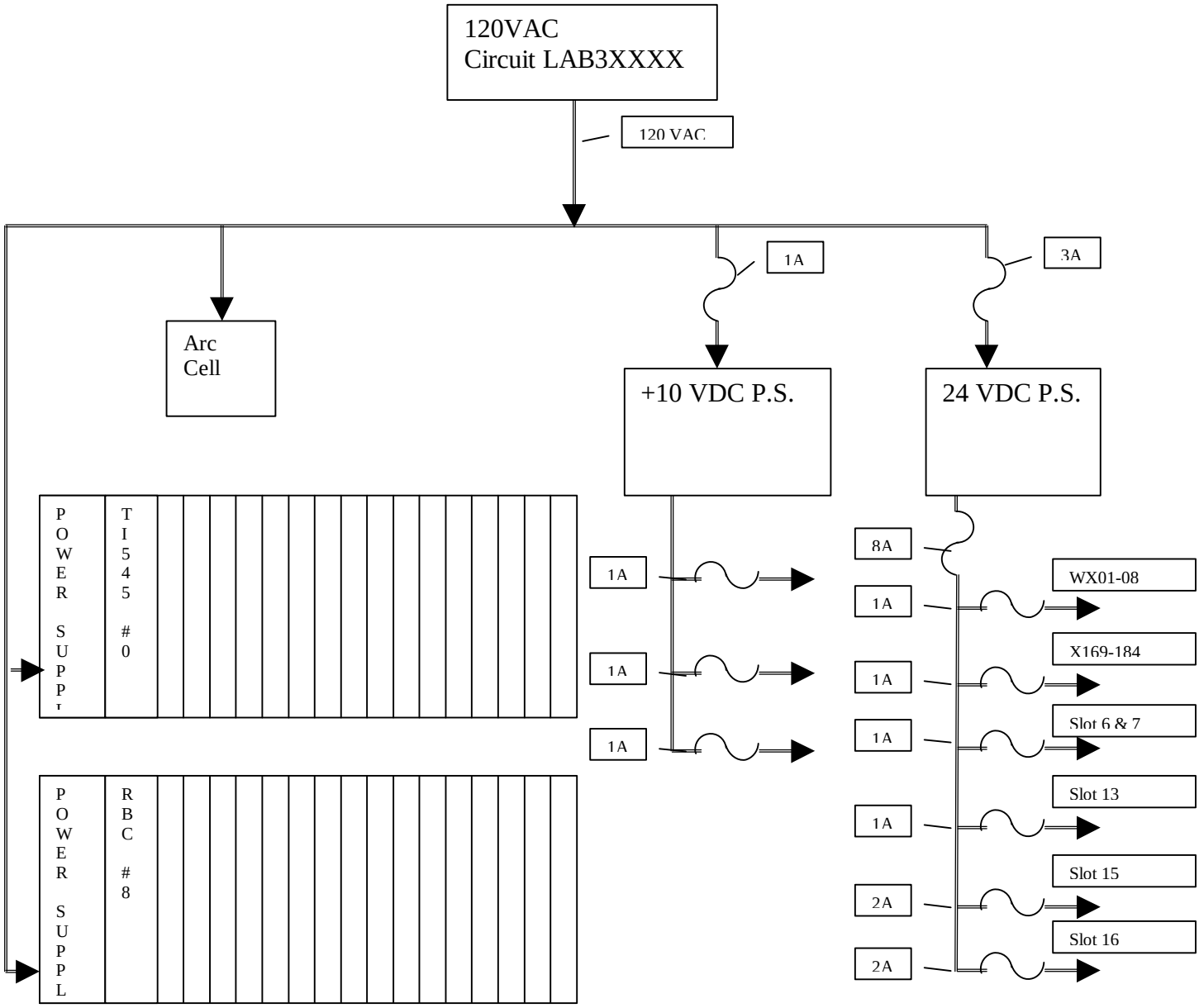

LAB 3 Cryogenic Controls I/O
Power Distribution and Fusing